Active Ventilation Products, Inc.

Website: roofvents.com Email: sales@roofvents.com

Specification Sheet

2/28/2022

Aura Vent Retrofit Model: AV-8-RF Diameter: 8"

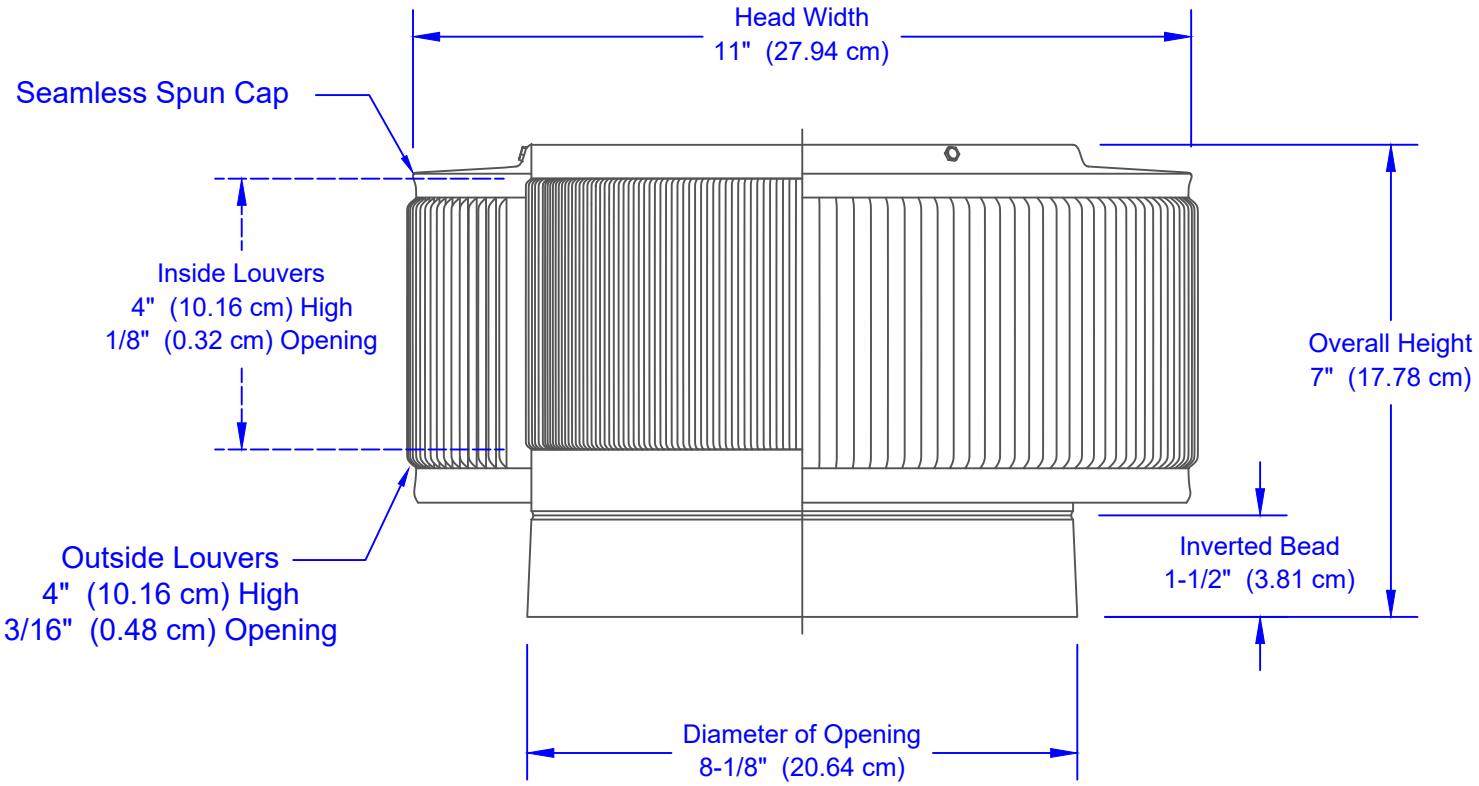

Cut-away View