Active Ventilation Products, Inc.

Website: roofvents.com Email: sales@roofvents.com

Specification Sheet

11/2/2022

Round Back Vent Intake Model: RBV-12-C2-IN Diameter: 12" Collar Height: 2"

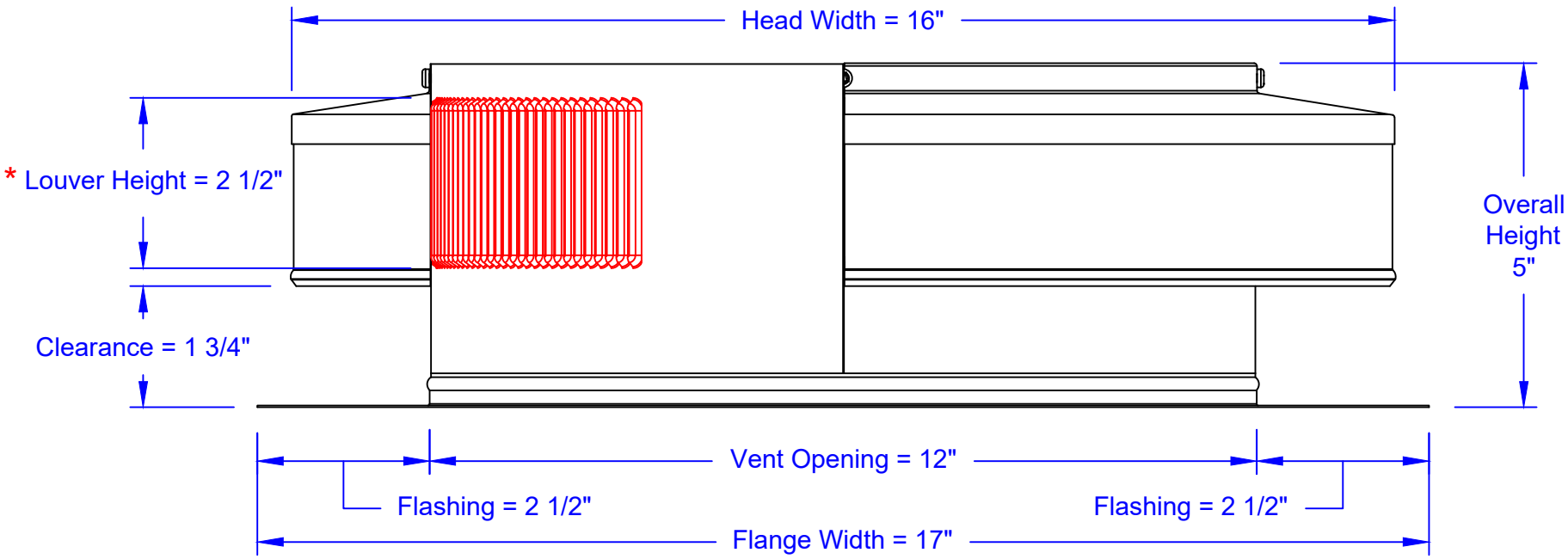

* Louver Opening = ⅛"
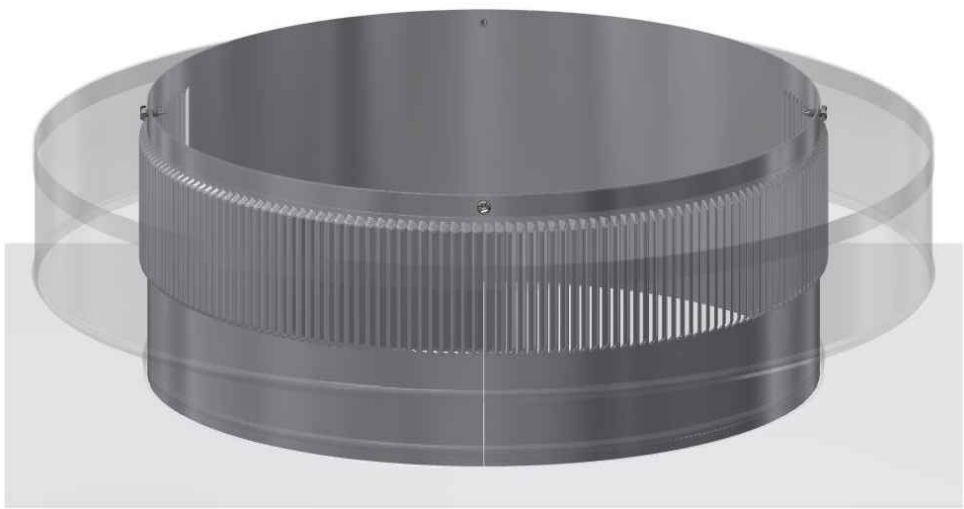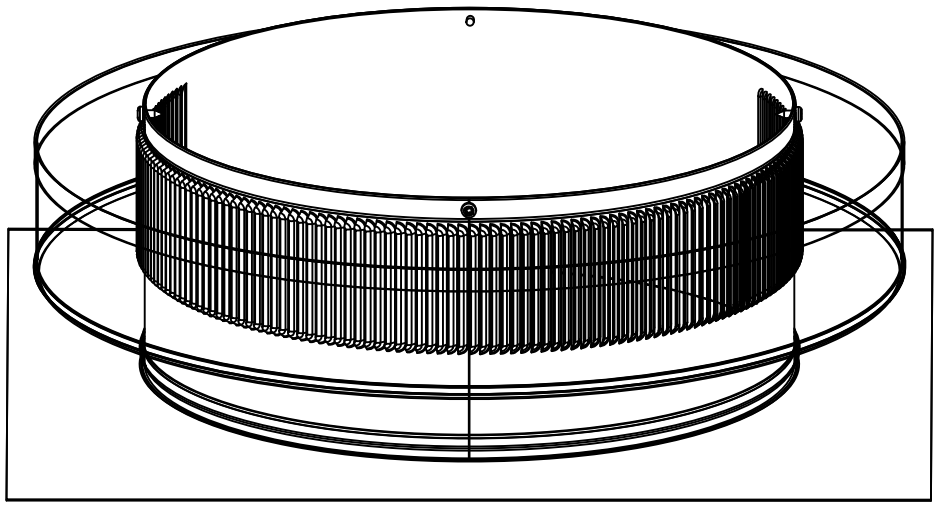
- Aluminum Alloy 3000 Series
- Minimum Thickness = 0.025"