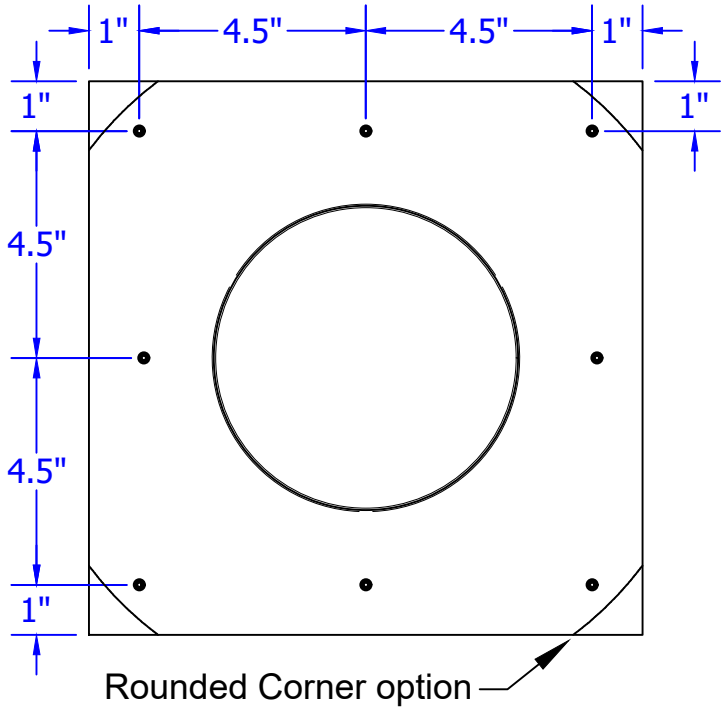

Round Back Roof Vent

Model: RBV-6-C2 Diameter: 6" Collar Height: 2"

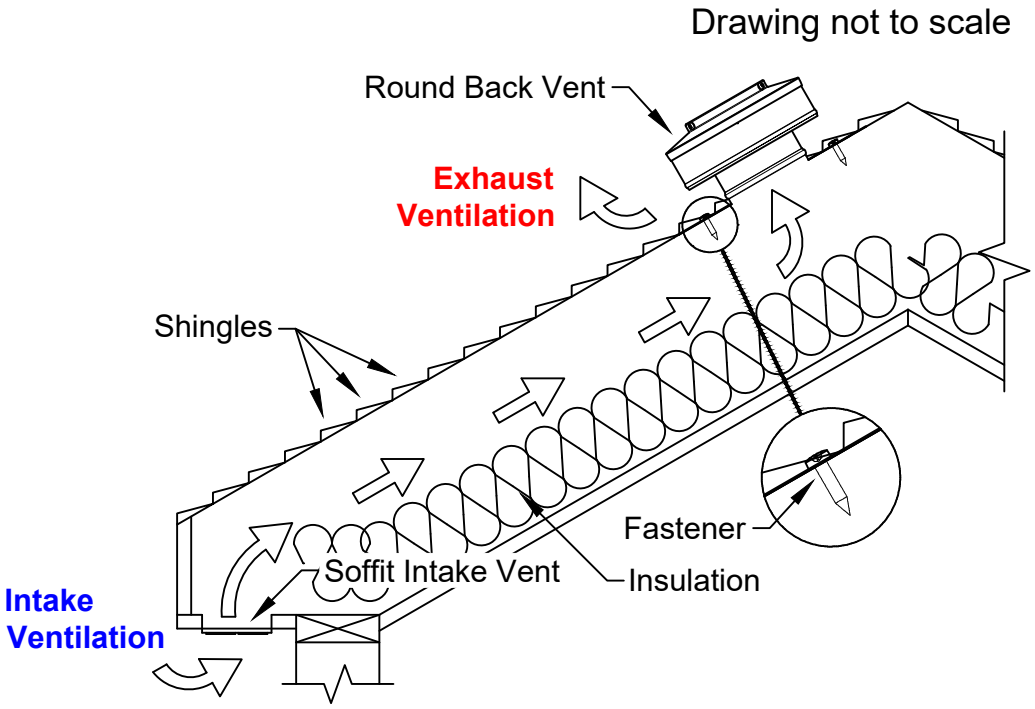

Round Back Roof Vent Detail & Installation Instructions

1. Cut a circular hole 6" in diameter in the roof deck. Remove all debris.
2. Apply sealant to the underside of the flange, then place vent down.
3. Screw* vent onto roof deck, following the pattern as shown.
4. Seal all seams and screws with an approved roofing sealant

Recommended installation screw: **Flat, Bugle or Wafer Head #10 x 1 1/2" Steel Wood Screw, Type A Point*

Total number of screws needed = 8 *(screws not included)*

Active Ventilation Products, Inc.

Visit us: roofvents.com *Email us: sales@roofvents.com*

1/25/2024