Screw Pattern (Symmetrical for all sides)

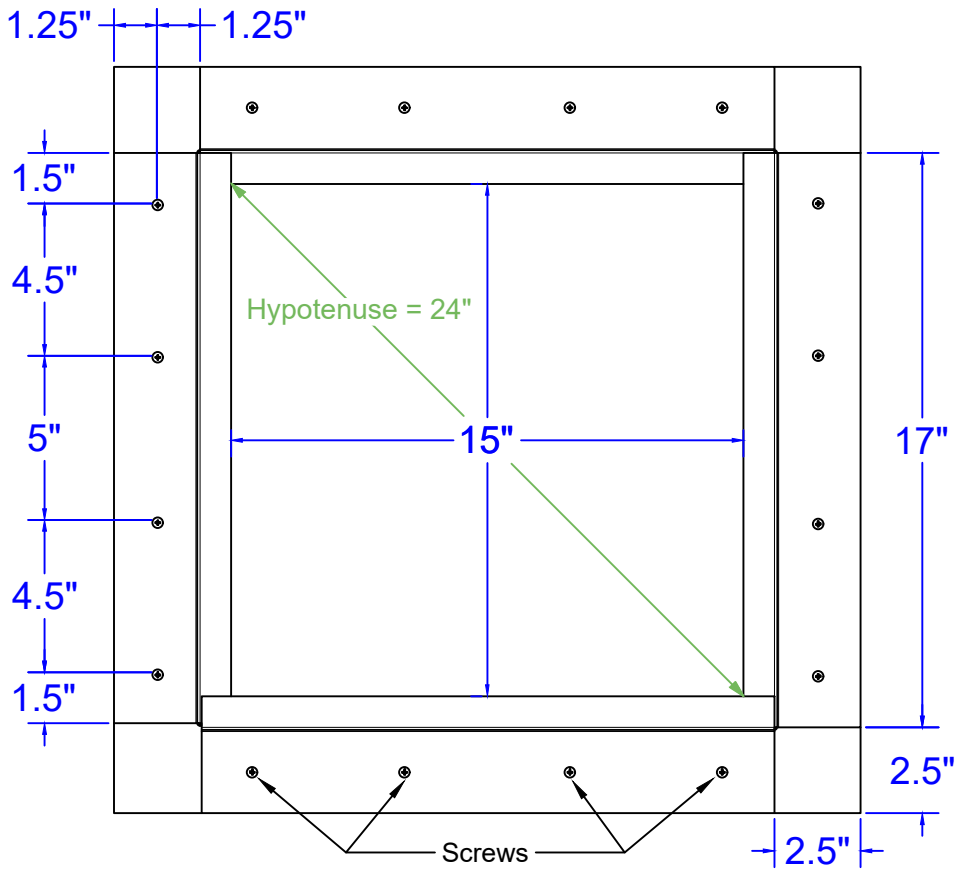

Roof Curb Flashing Detail

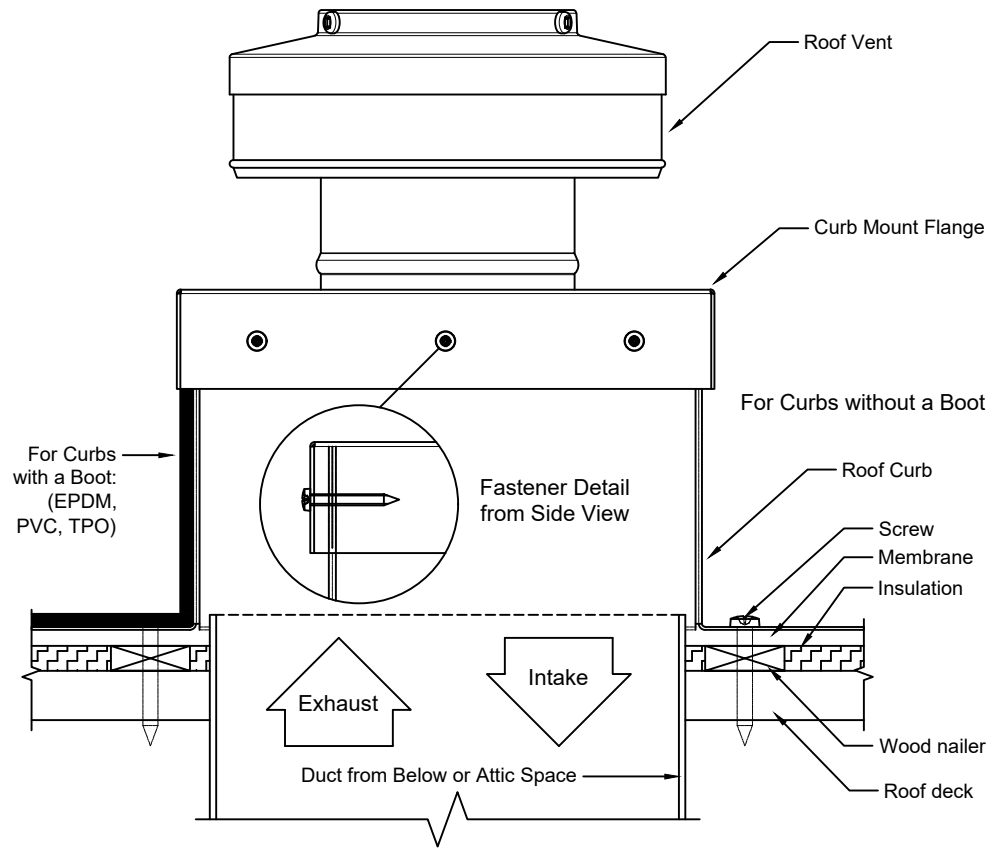

- Aluminum Alloy 3003-H14
- Thickness = 0.040" ± 0.005
- Tolerance = ± .25 (¼")

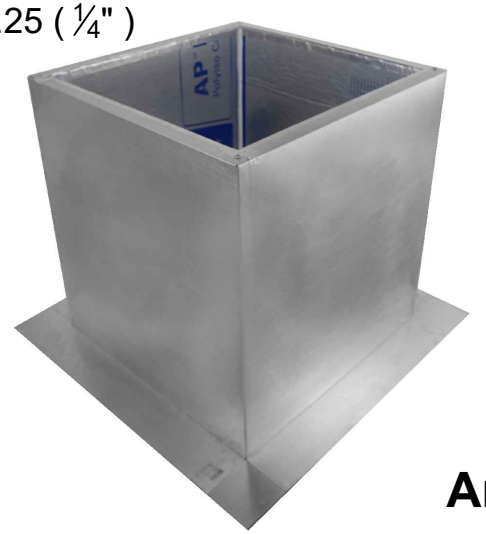

Angled View

Roof Curb Installation Instructions

1. Cut a square or round hole 15" in diameter in the roof deck.
2. Total number of screws needed for flange = 16
3. *Recommended installation screw:* ***Flat, Bugle or Wafer Head*** *#10 x 1 1/2" Sheet Metal Screw, Type A Point*
4. Flash roof curb onto deck according to specifications of the membrane manufacturer.
5. Screws not included.

Insulated Roof Curb Model: RC-14-H18-Ins

Inside Opening: 15", Outside Length & Width: 17", Height: 18"

Active Ventilation Products, Inc.

Website: roofvents.com Email: sales@roofvents.com

11/14/2023