# Screw Pattern (Symmetrical for all sides)

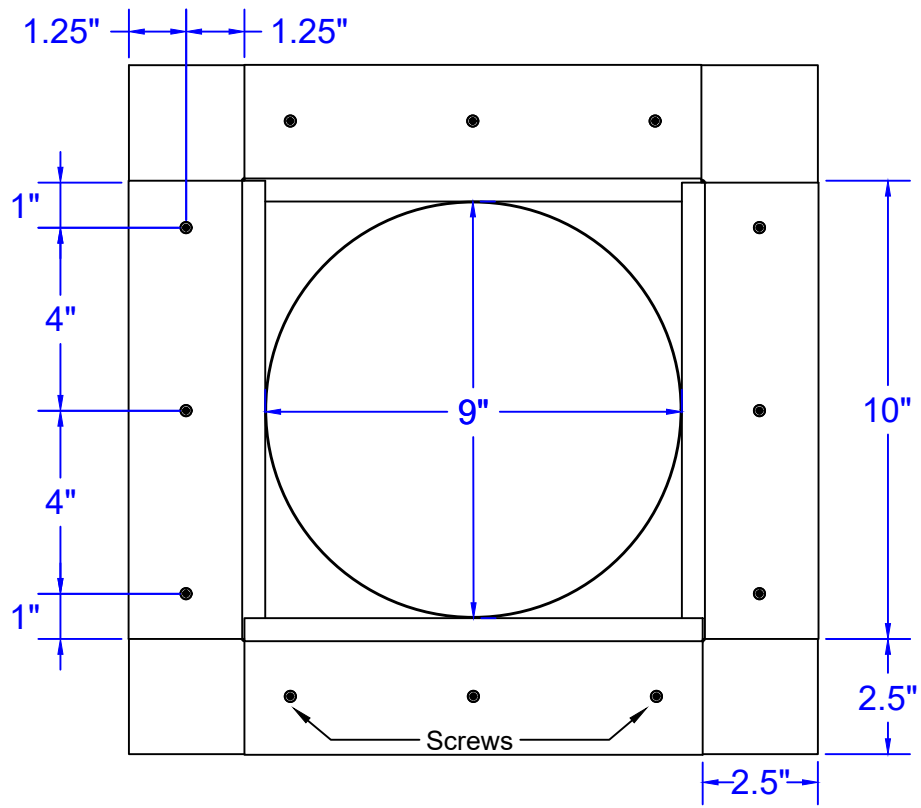


# Roof Curb Flashing Detail

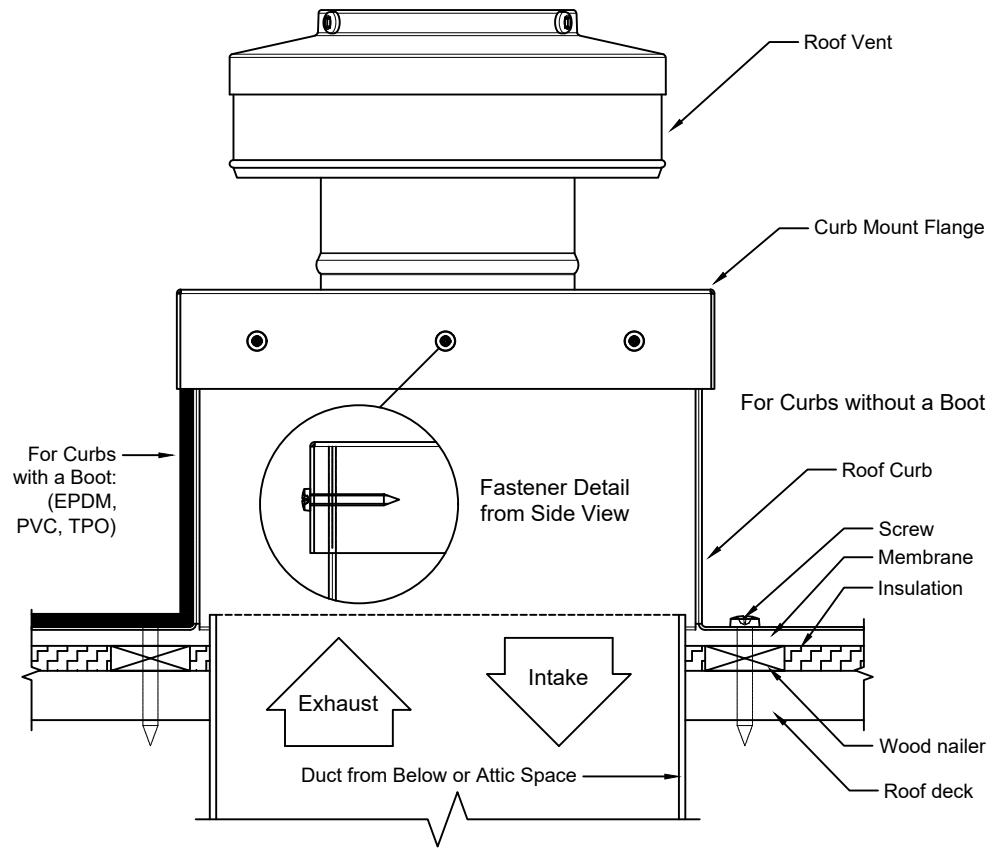


- Aluminum Alloy 3003-H14
- Thickness = 0.025" ± 0.005
- Tolerance = ± .25 ( ¼" )

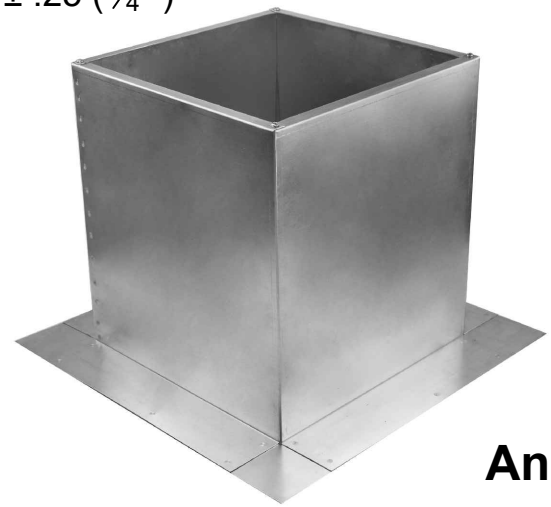

**Angled View**

# Roof Curb Installation Instructions

1. Cut a round hole 9" in diameter in the roof deck.
2. Total number of screws needed for flange = 12
3. *Recommended installation screw:* ***Flat, Bugle or Wafer Head*** *#10 x 1 1/2" Sheet Metal Screw, Type A Point*
4. Flash roof curb onto deck according to specifications of the membrane manufacturer.
5. Screws not included.

## Roof Curb Model: RC-7-H12

**Inside Opening: 9", Outside Length & Width: 10", Height: 12"**


**Active Ventilation Products, Inc.**

Website: roofvents.com Email: sales@roofvents.com


**11/9/2023**