Universal Vent Installation Instructions for Parapet Wall

1. Cut a rectangular slot 2.5" x 8". The hole should between two studs.
2. Apply sealant to underside of the flanges.
3. Slide UV's upper flange under siding or parapet cap flashing. Make sure to align the ribs of the vent with the opening. If installing multiple vents, each vent should be at least 12" apart.
4. Recommended installation screw: #10 x 1 1/2" Sheet Metal Screw
5. Total number of screws needed = 6
6. Screws not included.

Universal Vent Flashing Detail for Parapet Wall

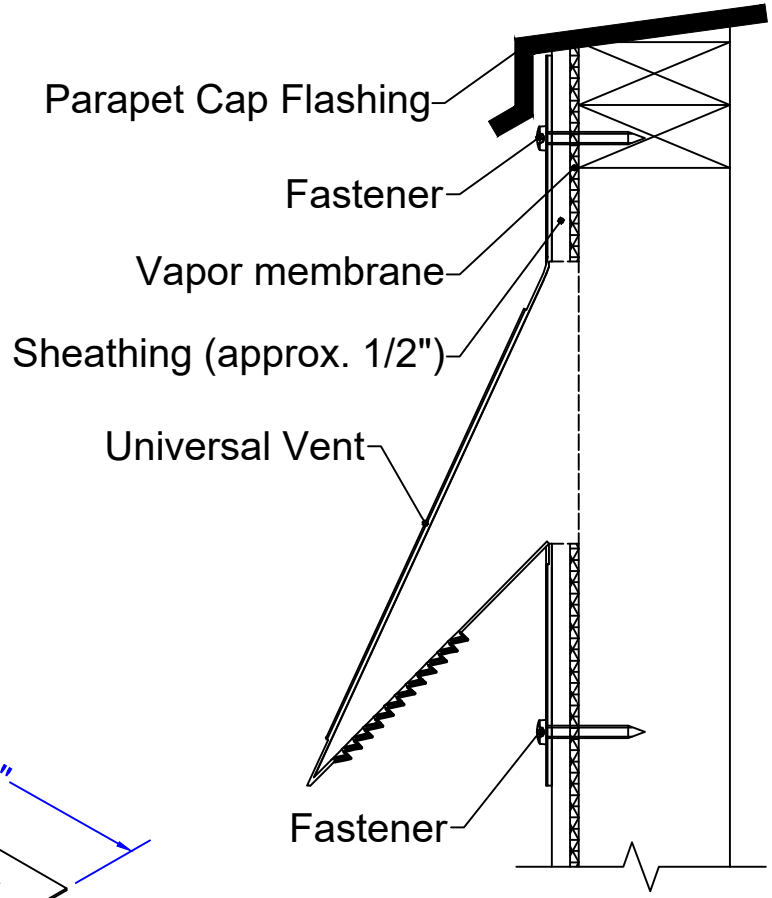

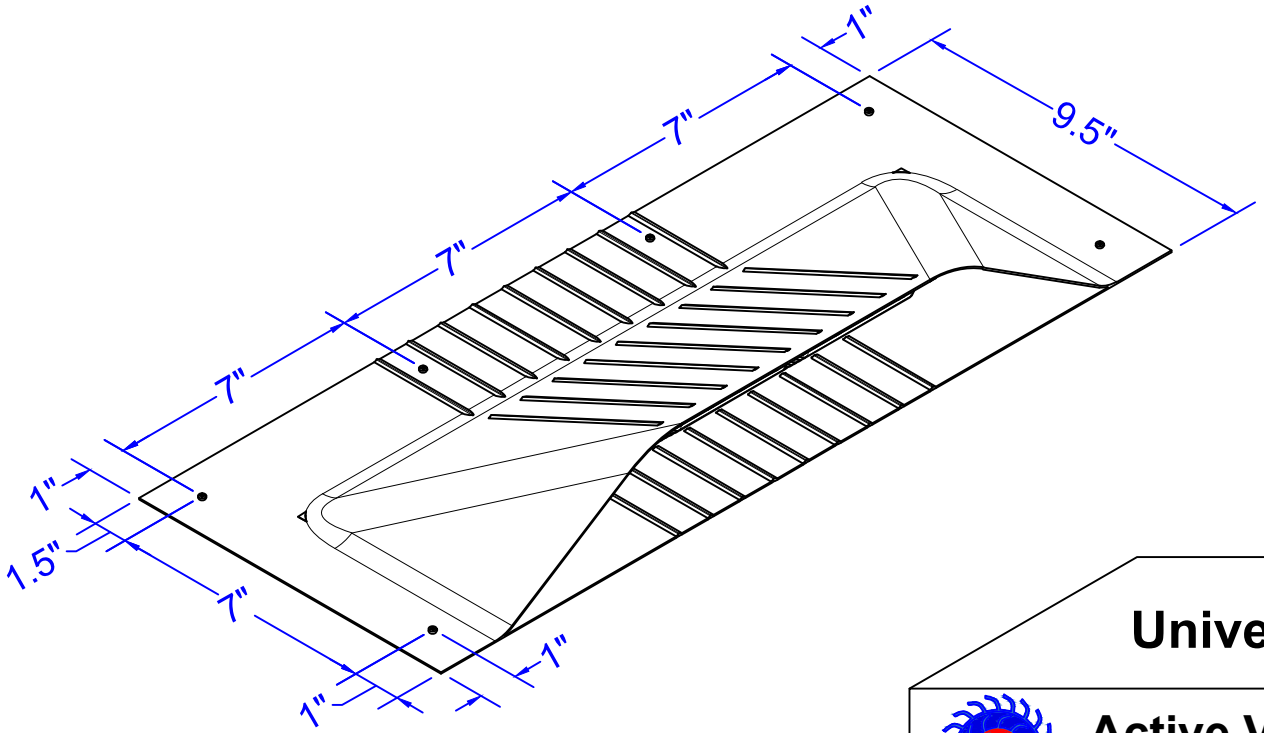

Universal Vent Model: UV-15

Active Ventilation Products, Inc.

Website: roofvents.com Email: sales@roofvents.com

10/18/2021