Active Ventilation Products, Inc.

Website: roofvents.com Email: sales@roofvents.com

Specification Sheet

5/2/2022
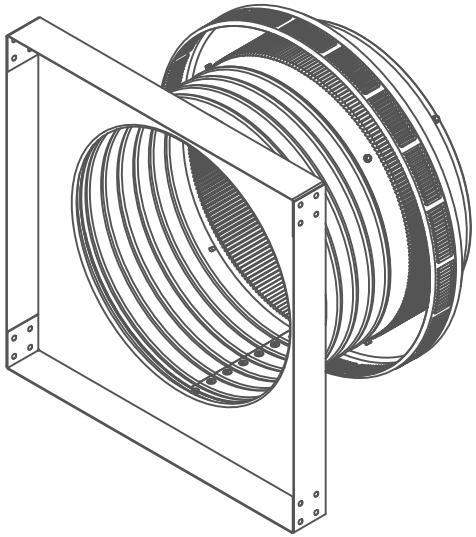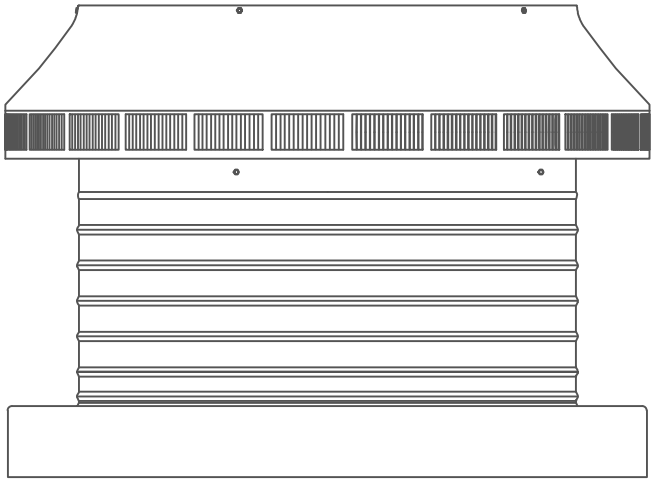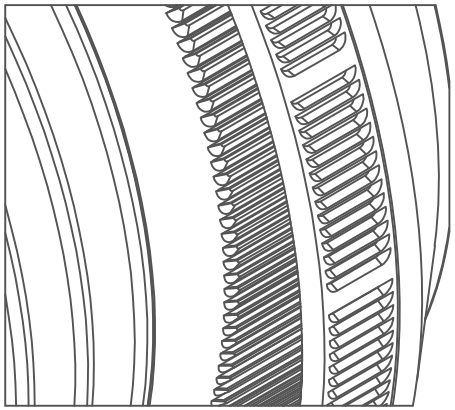
Pop Vent with CMF Model: PV-14-C6-CMF Diameter: 14" Collar Height: 6"