Active Ventilation Products, Inc.

Website: roofvents.com Email: sales@roofvents.com

Specification Sheet

5/3/2022
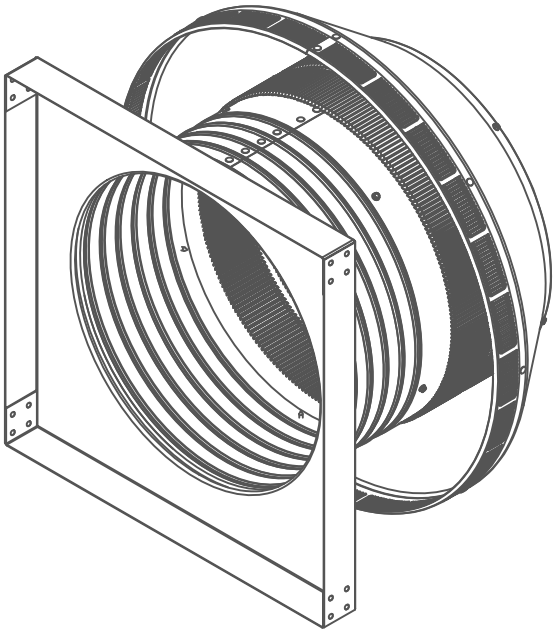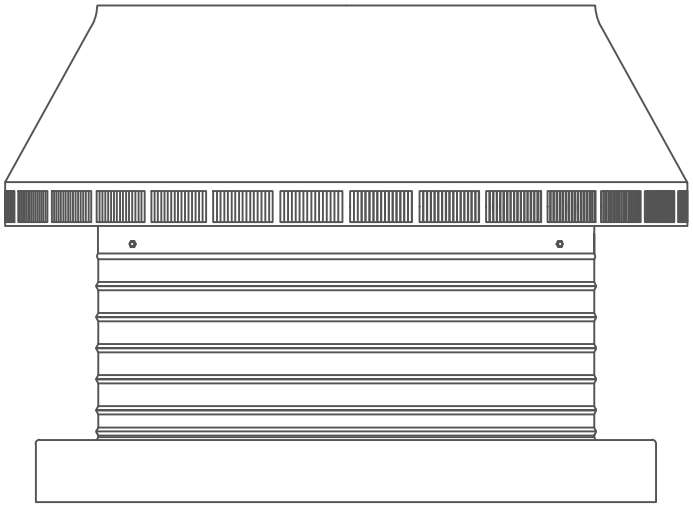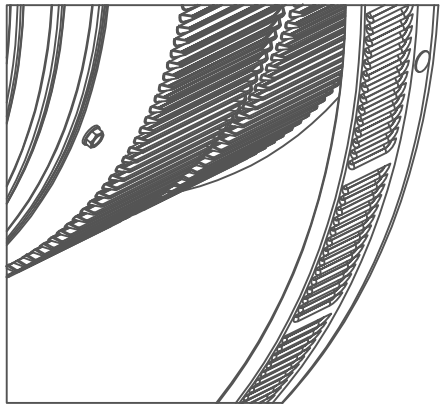
Pop Vent with CMF Model: PV-16-C6-CMF Diameter: 16" Collar Height: 6"