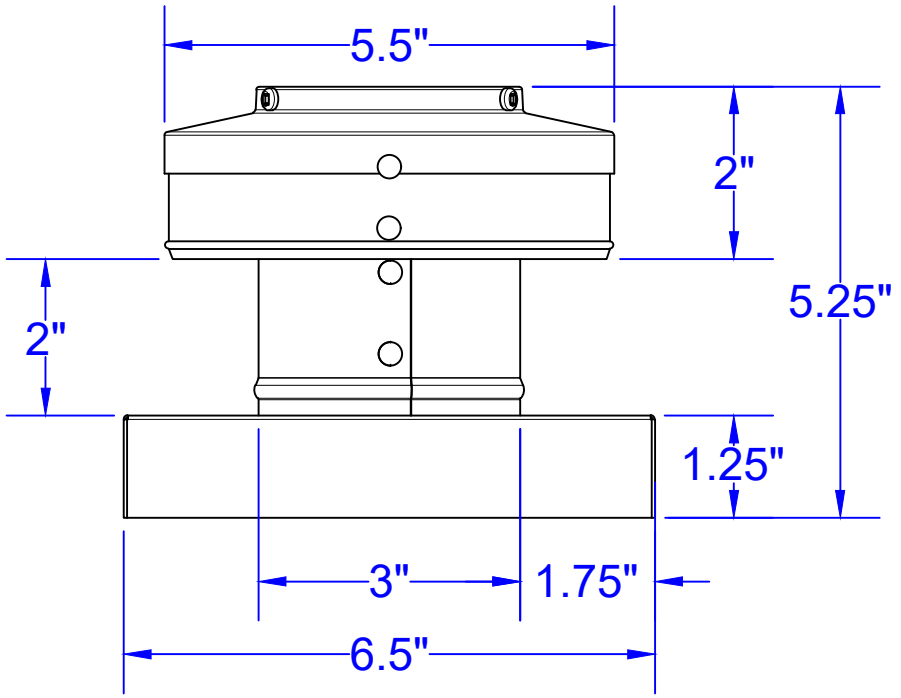

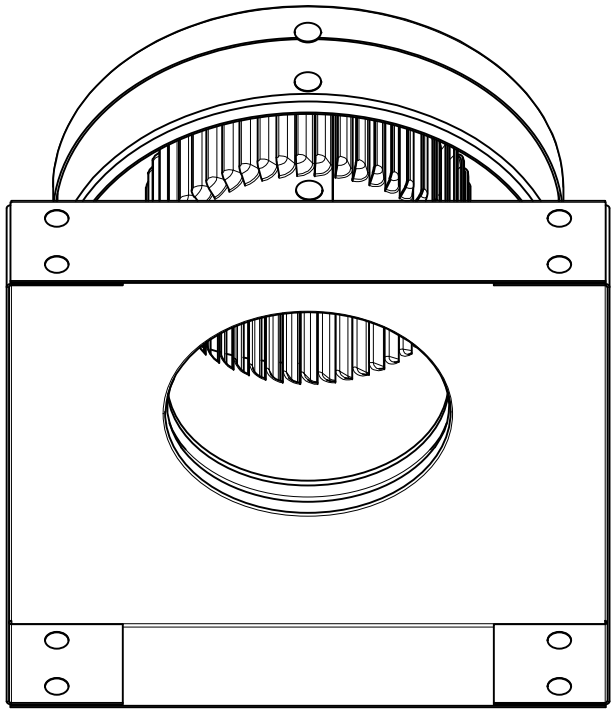

Round Back Vent with Curb Mount Flange

Model: RBV-3-C2-CMF

Active Ventilation Products, Inc.

Website: roofvents.com Email: sales@roofvents.com

9/21/2021