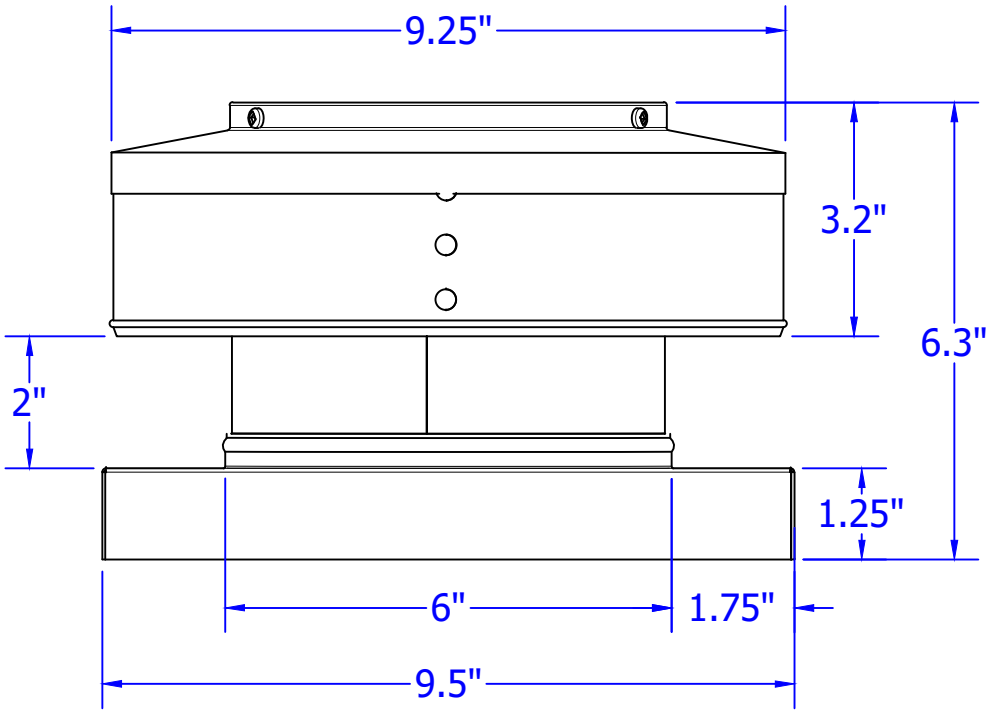

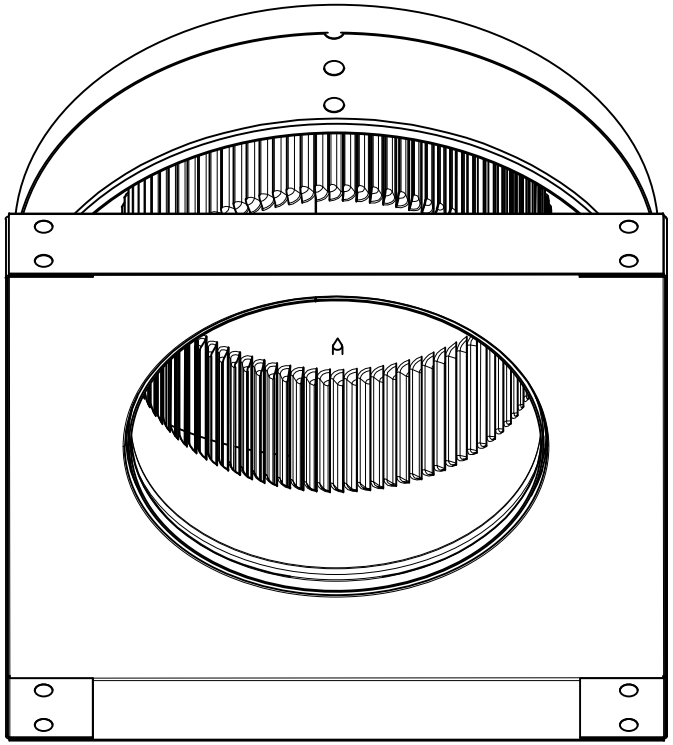

Round Back Vent with Curb Mount Flange

Model: RBV-6-C2-CMF

Active Ventilation Products, Inc.

Website: roofvents.com Email: sales@roofvents.com

9/22/2021