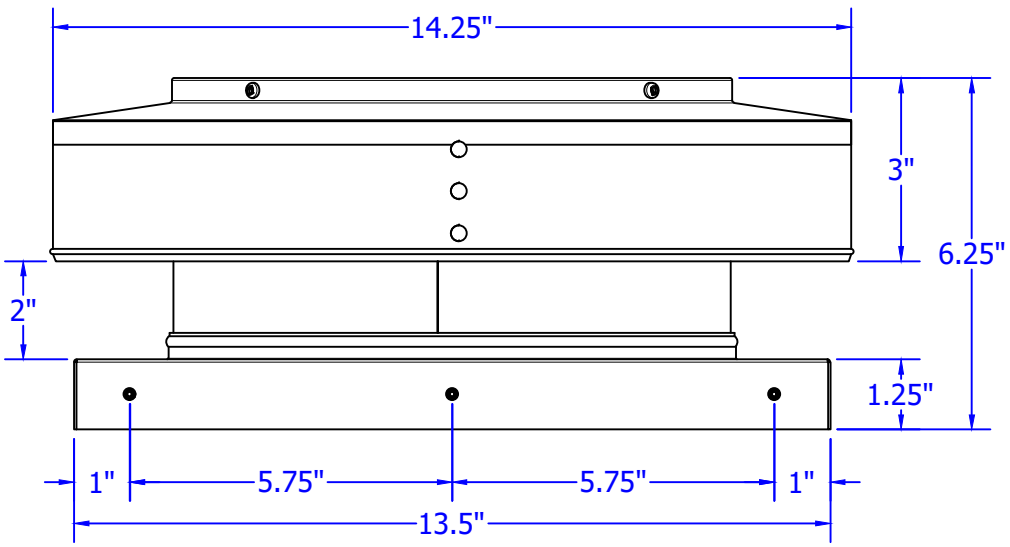

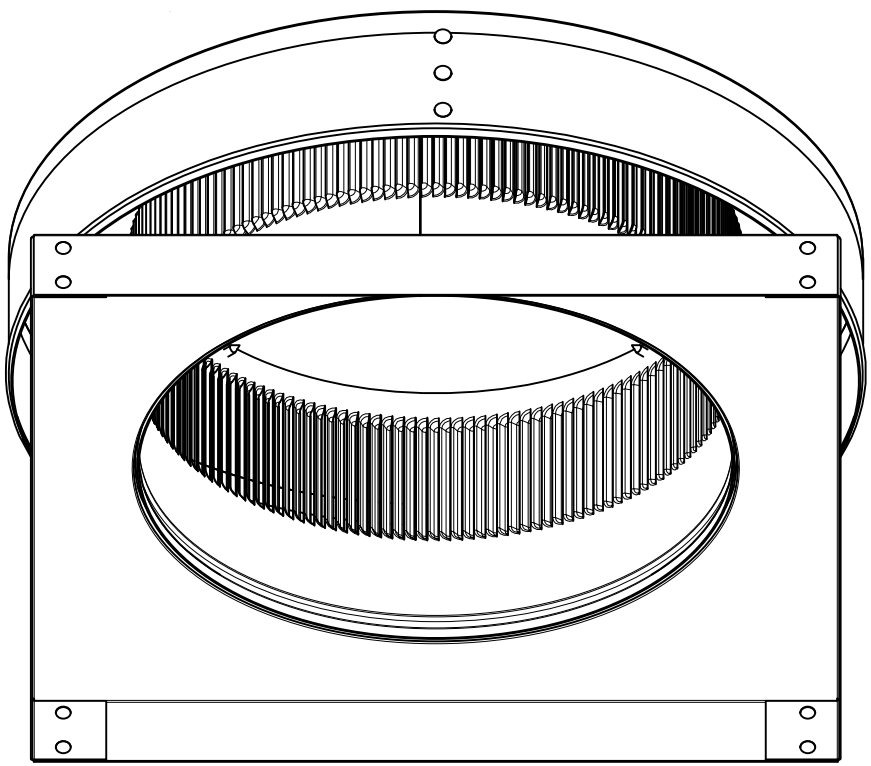

Curb Mount Flange Detail

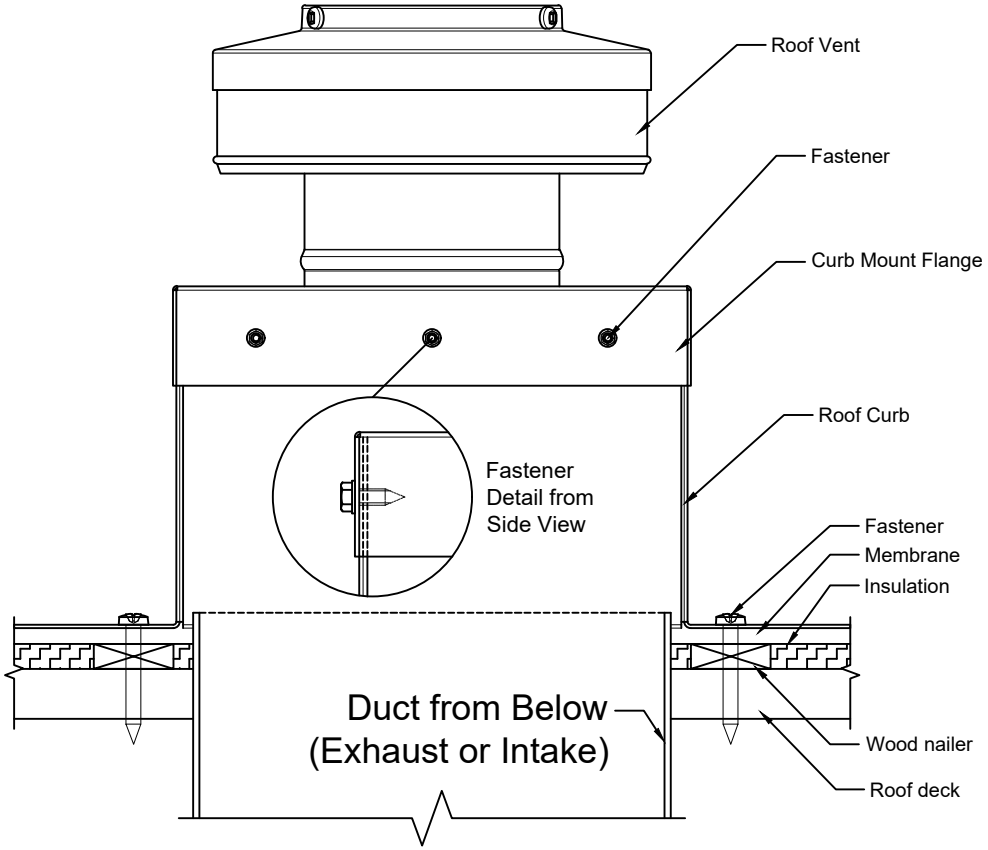

Curb Mount Flange Installation Instructions

1. Slide Curb Mount Flange onto the roof curb.
2. Attach Curb Mount Flange to roof curb using fasteners.
3. *Recommended installation screw: #8 x 1/2" Sheet Metal Screw*
4. Total number of screws needed for CMF = 12
5. Screws not included.

Round Back Vent with Curb Mount Flange

Model: RBV-10-C2-CMF

Active Ventilation Products, Inc.

Website: roofvents.com Email: sales@roofvents.com

9/22/2021